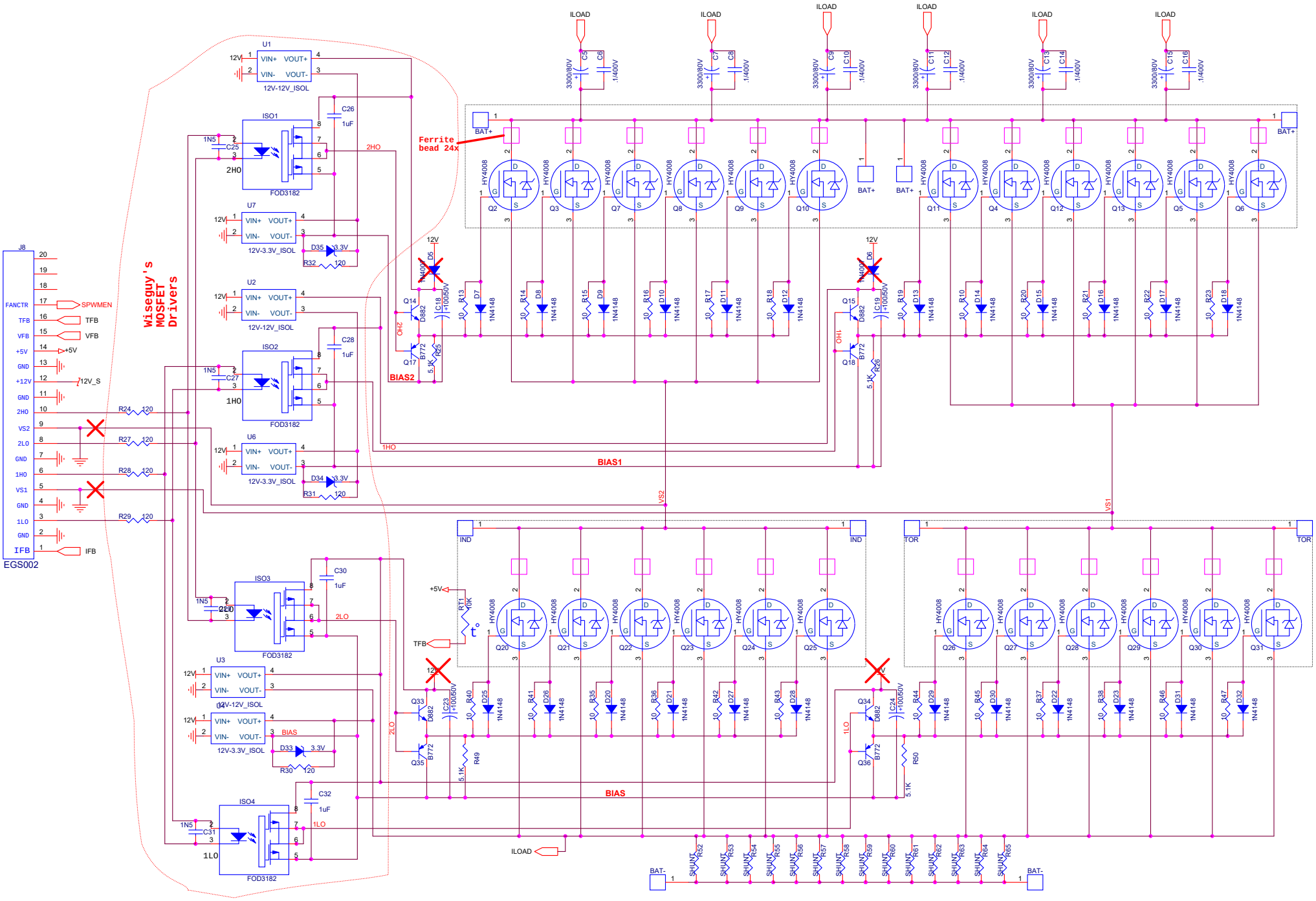
Wiseguy's MOSFET Drivers
J8
EGS002
FANCTR
TFB
VFB
+5V
GND
+12V
2HO
VS2
2LO
1HO
VS1
1LO
IFB
SPWMEN
12V_S
U1
12V-12V_ISOL
U7
12V-3.3V_ISOL
U2
U6
U3
ISO1
ISO2
ISO3
ISO4
FOD3182
Ferrite bead 24x
ILOAD
BAT+
BAT-
IND
TOR
HY4008
1N4148
B772
D882
BIAS1
BIAS2
BIAS
SHUNT